Hornell Model Railroad Club - Depot Layout

Reverse Loop Relay Connections

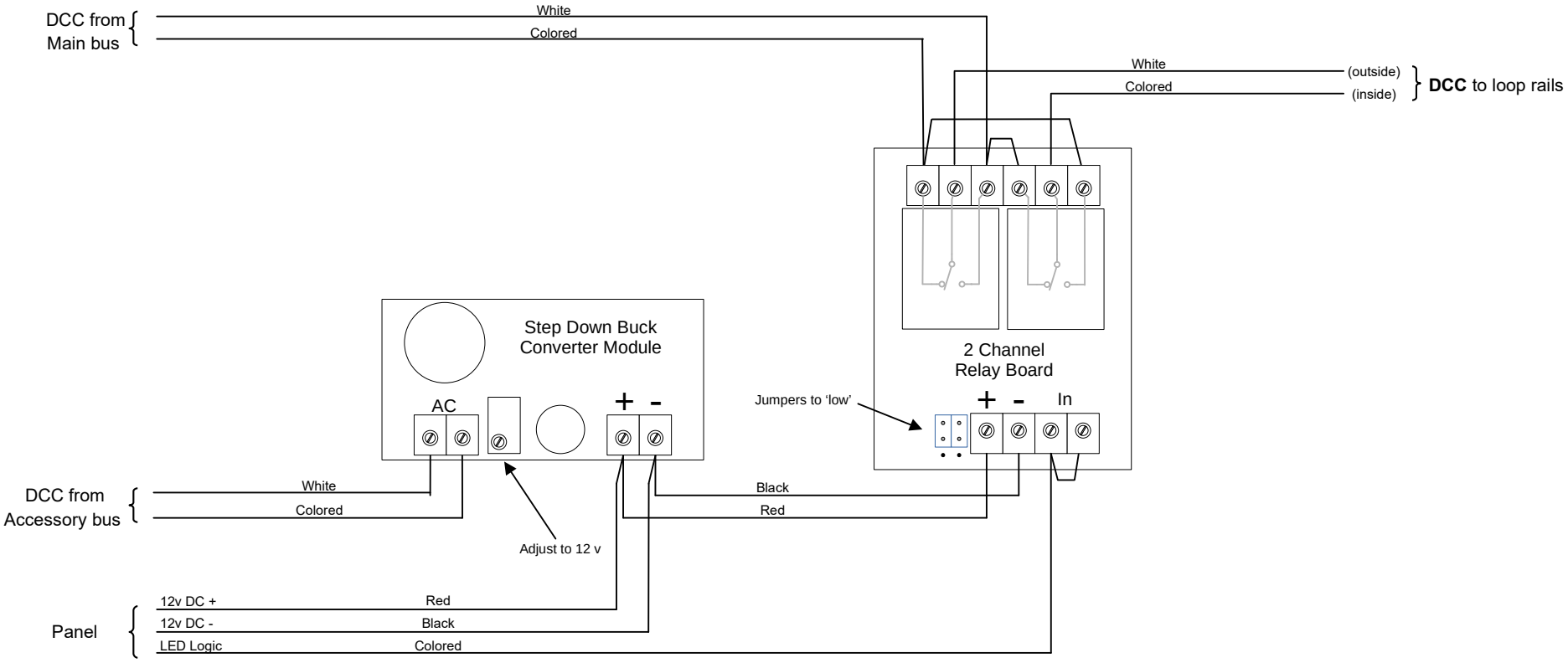

HMRC Reverse Loop Relay Connections
DNW 2026-08-31